bimota DB6

(L)

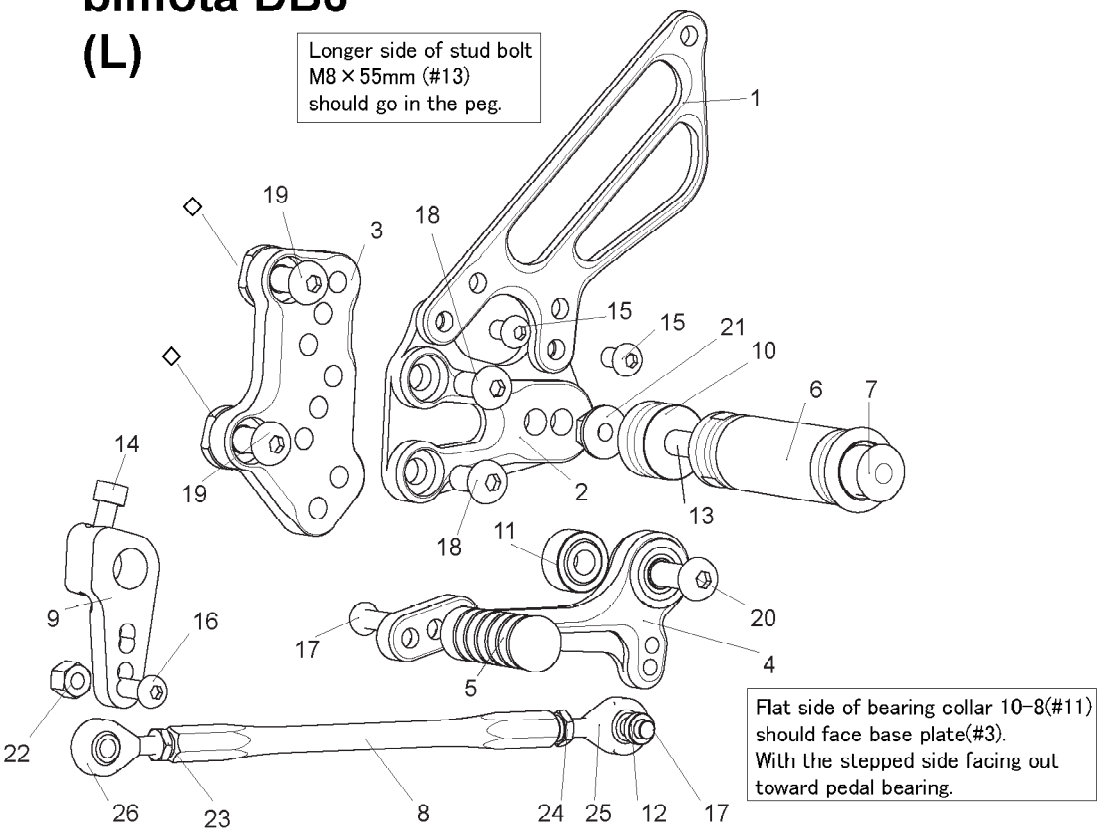

1. HEEL GUARD [L](HG14)
2. STEP PLATE [L]
3. BASE PLATE [L]
4. SHIFT PEDAL(SPD10)
5. PEDAL TIP DELRIN
6. FOOT PEG
7. FOOT PEG END CAP
8. SHIFT ROD 150
9. DUCATI SHIFT ARM (D-CA)
10. FOOT PEG COLLAR 15
11. BEARING COLLAR 10-8(BK)
12. ROD END COLLAR 3
13. STUD BOLT M8×55mm
14. SOCKET HEAD M6×20mm
15. BUTTON HEAD M6×10mm ×2
16. BUTTON HEAD M6×25mm
17. BUTTON HEAD M6×20mm ×2
18. BUTTON HEAD M8×15mm ×2
19. BUTTON HEAD M8×20mm ×2
20. BUTTON HEAD M8×35mm
21. FLANGE NUT M8
22. LOCK NUT M6
23. REVERSE JAM NUT M6
24. JAM NUT M6
25. MALE ROD END M6
26. MALE REVERSE ROD END M6

◇ BASE PLATE COLLAR 5-10 ×2 (pre-installed)

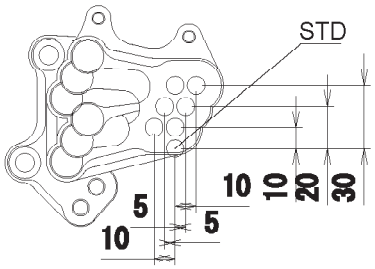

No brake light switch included.

(R)

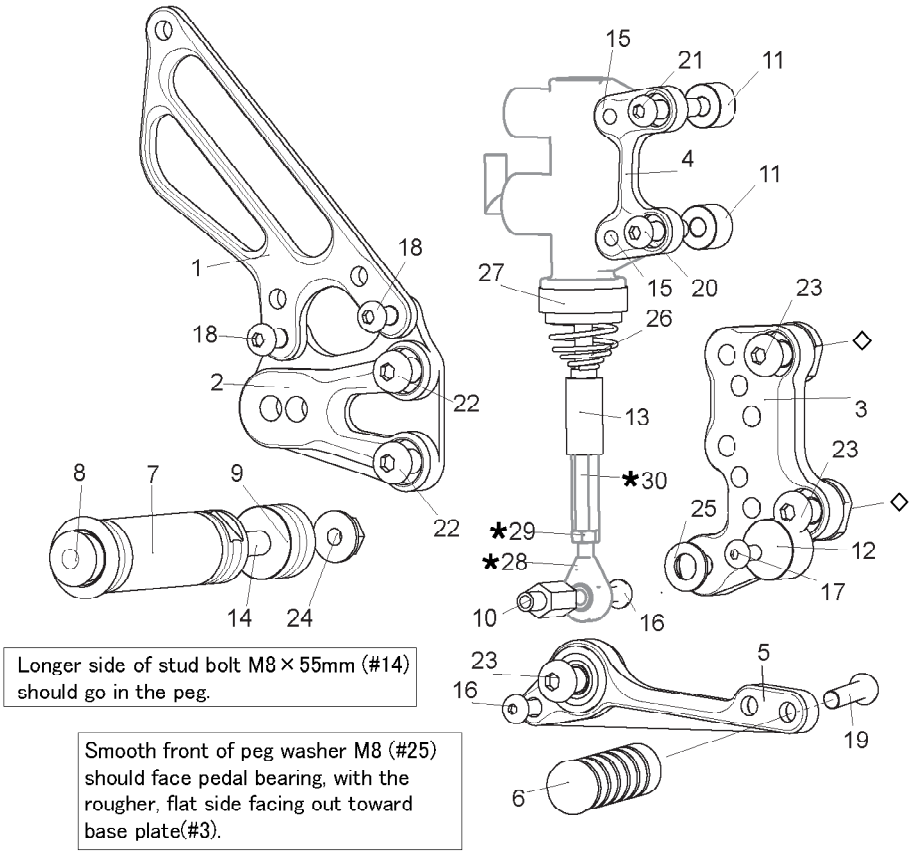

1. HEEL GUARD [R](HG-14)
2. STEP PLATE [R]
3. BASE PLATE [R]
4. MASTER STAY(BK)
5. BRAKE PEDAL (BPD15)
6. PEDAL TIP DELRIN
7. FOOT PEG
8. FOOT PEG END CAP
9. FOOT PEG COLLAR 15
10. BRAKE ROD ADAPTOR 15-8(BK)
11. COLLAR 10-6(BK) ×2
12. BRAKE PEDAL STOPPER DELRIN
13. SPRING SHEET DB6(BK)
14. STUD BOLT M8×55mm
15. BUTTON HEAD M6×15mm ×2
16. BUTTON HEAD M5×15mm ×2
17. BUTTON HEAD M5×20mm
18. BUTTON HEAD M6×10mm ×2
19. BUTTON HEAD M6×20mm
20. BUTTON HEAD M6×25mm
21. BUTTON HEAD M6×30mm
22. BUTTON HEAD M8×15mm ×2
23. BUTTON HEAD M8×25mm ×3
24. FLANGE NUT M8
25. PEG WASHER M8
26. RETURN SPRING 20
27. RETURN SPRING COLLAR(BK)

◇ BASE PLATE COLLAR 5-10 ×2 (pre-installed)

★28. MALE ROD END M5(STOCK)
★29. NUT M5(STOCK)
★30. BRAKE PUSH ROD(STOCK)