TRIUMPH SPEED TRIPLE 1050 ('11-)

FRAME SLIDERS
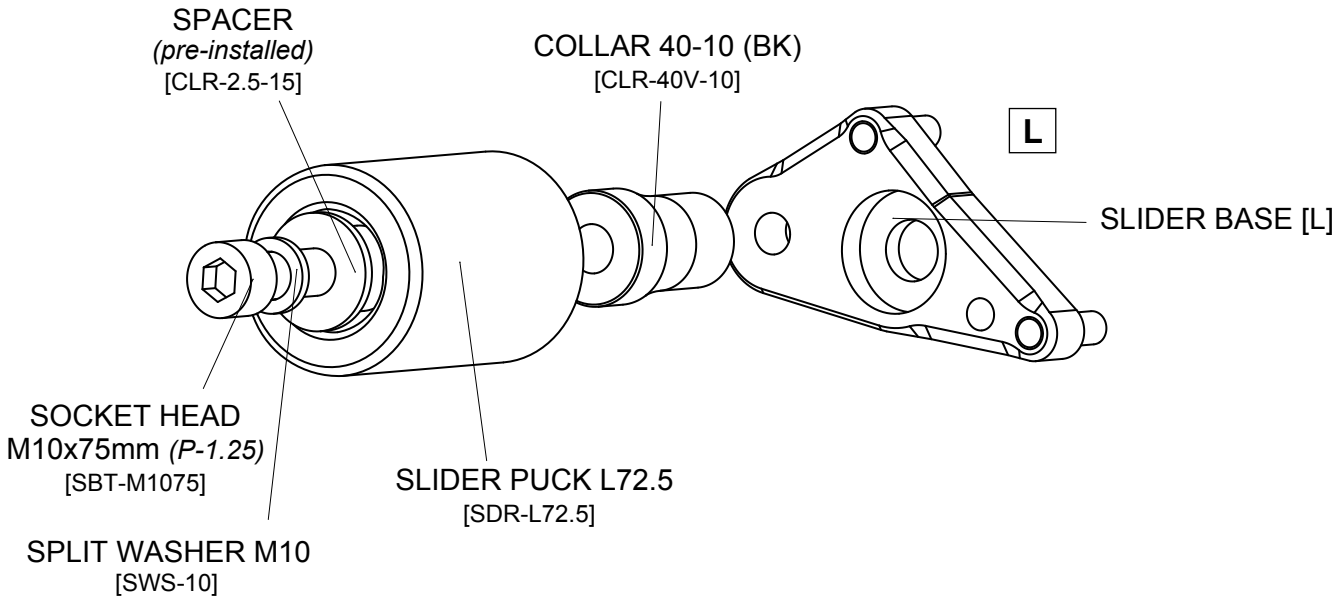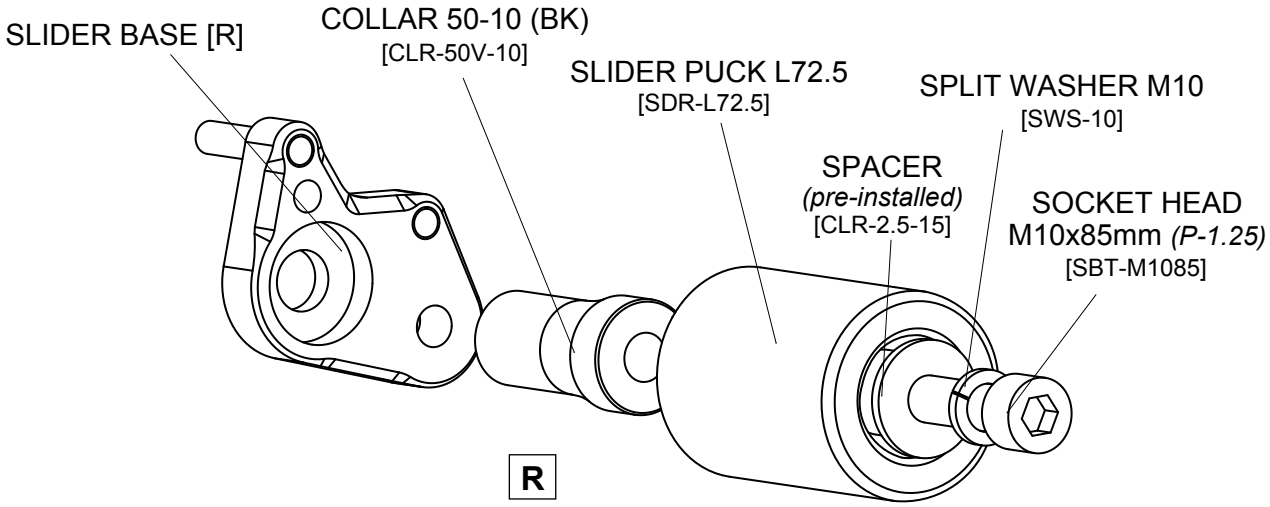
part# T-ST11FS