YAMAHA YZF-R1 ('15-)
FRAME SLIDERS
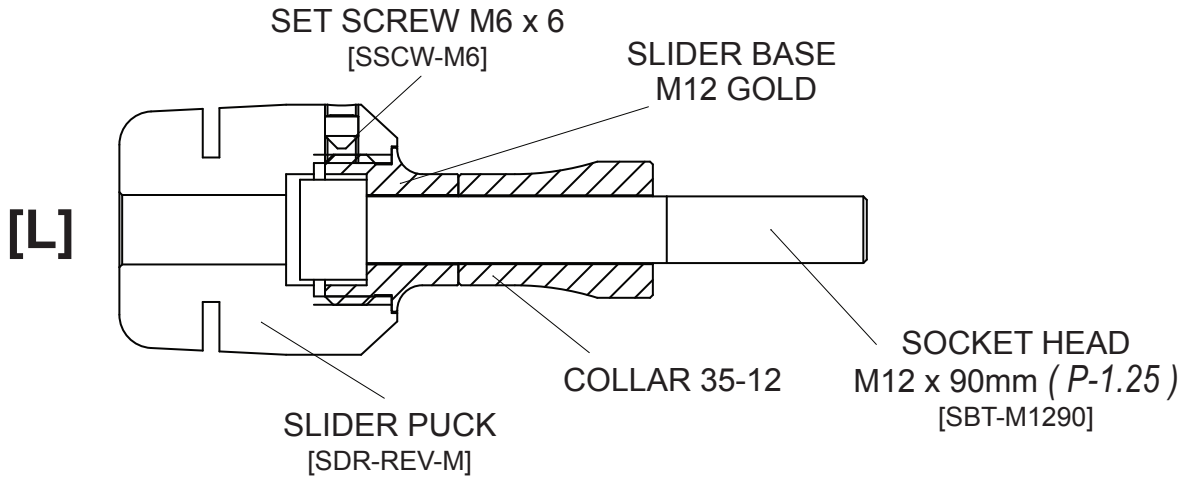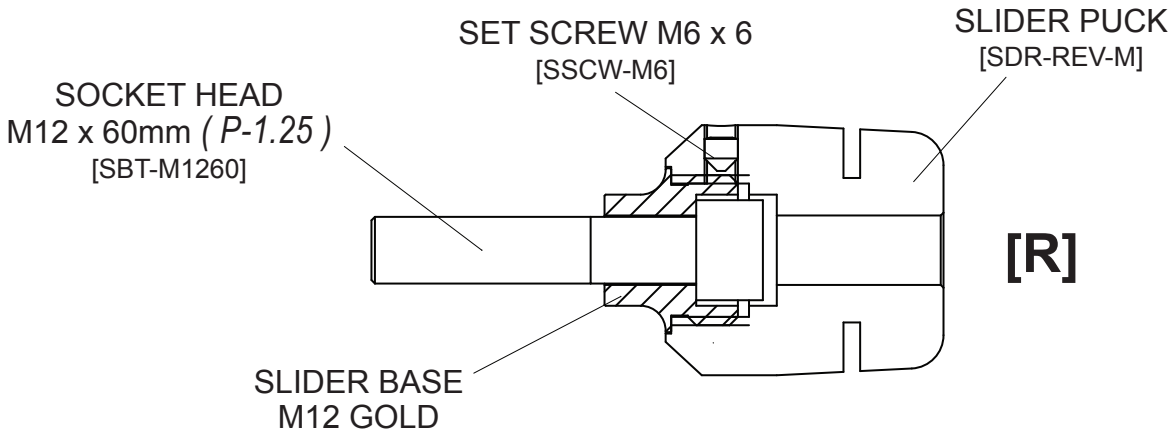
part# Y-R115FS