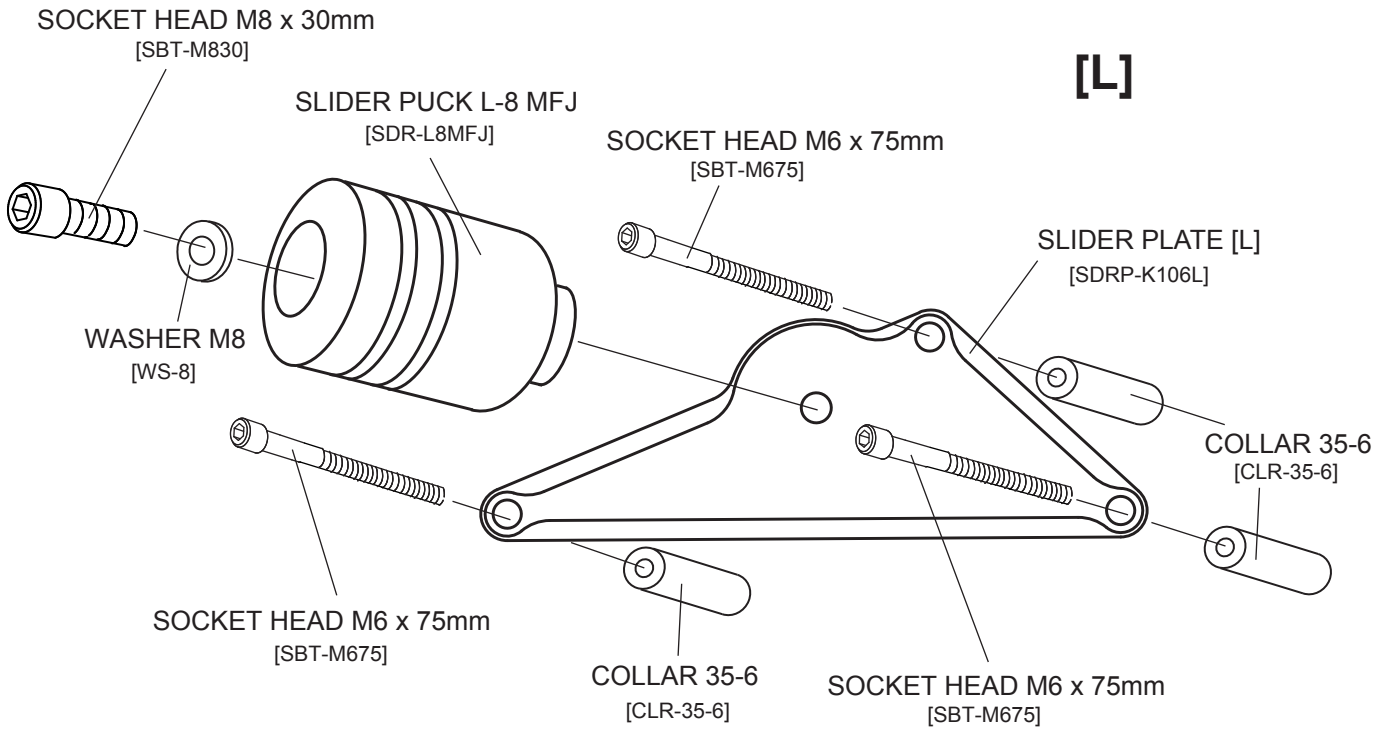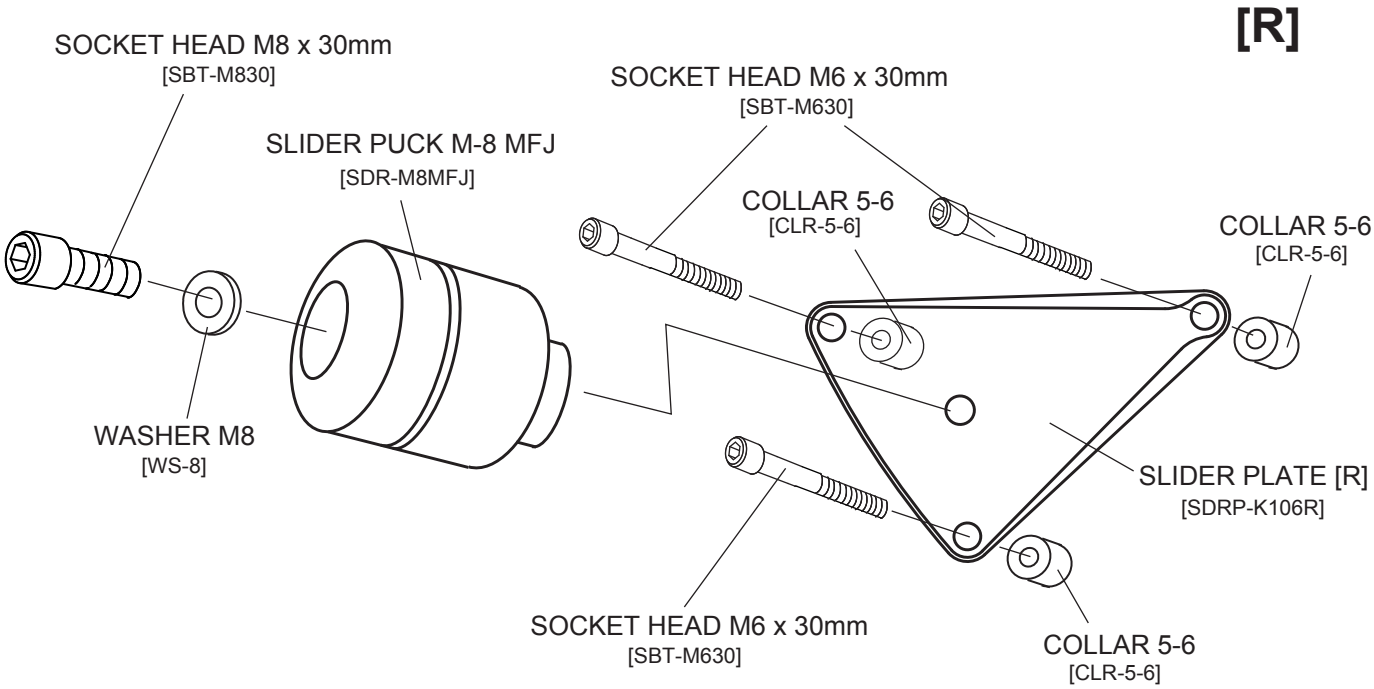KAWASAKI ZX-10R ('06-'07)
FRAME SLIDERS (part# K-ZX106FS)