HONDA GROM '22-
REVERSE SHIFT REAR SETS + TANDEM BRACKETS

part# H-GROM22RSTR

[L]-SIDE

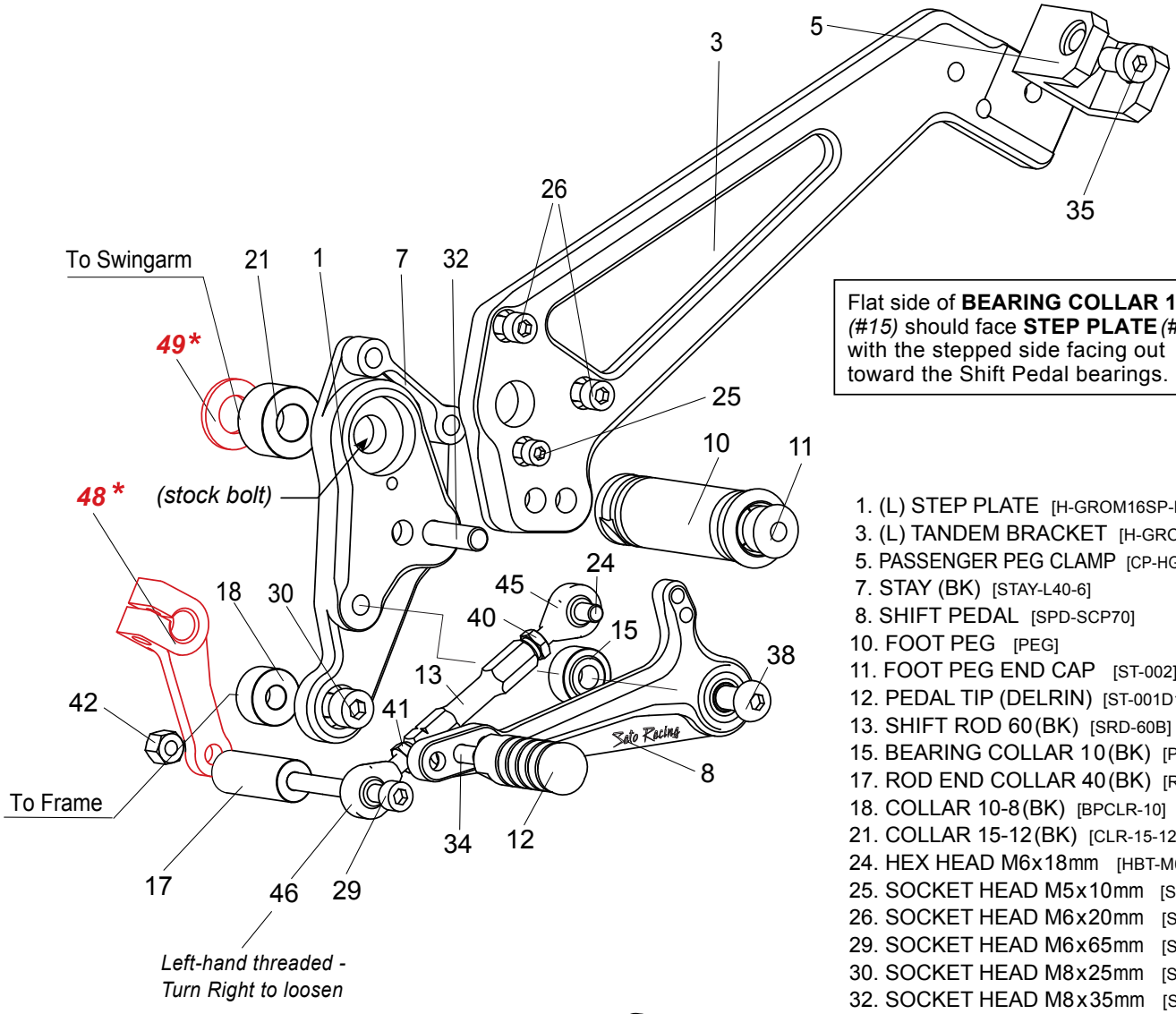

Flat side of **BEARING COLLAR 10** *(#15)* should face **STEP PLATE** *(#1)*, with the stepped side facing out toward the Shift Pedal bearings.

1. (L) STEP PLATE [H-GROM16SP-L]
3. (L) TANDEM BRACKET [H-GROM22TB-L]
5. PASSENGER PEG CLAMP [CP-HGROM22RST]
7. STAY (BK) [STAY-L40-6]
8. SHIFT PEDAL [SPD-SCP70]
10. FOOT PEG [PEG]
11. FOOT PEG END CAP [ST-002]
12. PEDAL TIP (DELRIN) [ST-001D18]
13. SHIFT ROD 60(BK) [SRD-60B]
15. BEARING COLLAR 10(BK) [PEGBGCLR-10SB]
17. ROD END COLLAR 40(BK) [RDED-CLR40]
18. COLLAR 10-8(BK) [BPCLR-10]
21. COLLAR 15-12(BK) [CLR-15-12]
24. HEX HEAD M6x18mm [HBT-M618]
25. SOCKET HEAD M5x10mm [SBT-M510]
26. SOCKET HEAD M6x20mm [SBT-M620] *x 2*
29. SOCKET HEAD M6x65mm [SBT-M665]
30. SOCKET HEAD M8x25mm [SBT-M825]
32. SOCKET HEAD M8x35mm [SBT-M835]
34. LOW SOCKET HEAD M6x20mm [LSBT-M620]
35. LOW SOCKET HEAD M8x15mm [LSBT-M815]
37. BUTTON HEAD M8x30mm [BBT-M830]
38. BUTTON HEAD M8x35mm [BBT-M835]
40. JAM NUT M6 [JNT-6]
41. REVERSE JAM NUT M6 [JNT-6L]
42. LOCK NUT M6 [LNT-6]
45. MALE ROD END M6 [RDED-M6]
46. REVERSE MALE ROD END M6 [RDED-M6L]

***48. CHANGE ARM (Stock Honda Part)**
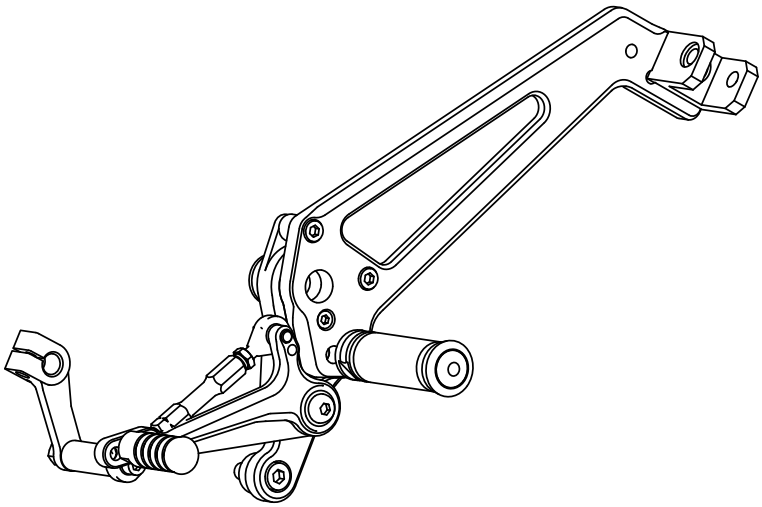
***49. WASHER (Stock Honda Part)**